SEMARAK ILMU PUBLISHING

Journal of Advanced Research in Applied Sciences and Engineering Technology

Journal homepage: https://semarakilmu.com.my/journals/index.php/applied_sciences_eng_tech/index
ISSN: 2462-1943

Solar Hybrid System Study for RPS Community in Gerik, Perak

Amir Faiz Zaidi[1], Azlin Mohd Azmi[1,2,*]

[1] School of Mechanical Engineering, College of Engineering, Universiti Teknologi MARA, 40450 Shah Alam, Selangor, Malaysia
[2] Solar Research Institute, Universiti Teknologi MARA, 40450 Shah Alam, Selangor, Malaysia

ARTICLE INFO

Keywords:

HRES; electricity; optimization; hydrogen; HOMER

ABSTRACT

This paper addresses the implementation of a Hybrid Renewable Energy System (HRES) to supply electricity to a rural area in RPS Kemar, Gerik, Perak. RPS Kemar, primarily relies on diesel-powered generators for electricity generation because the area is distant from national grid sources. Consequently, extending the grid to this area is costly. Unfortunately, diesel-powered generators are expensive due to high demand from industry. Moreover, they have been identified as harmful to the environment due to the significant amount of carbon dioxide they release, contributing to greenhouse gases and abrupt climate changes. As an alternative to curbing the usage of diesel-powered generators, an HRES consisting of solar photovoltaic (PV) system, battery, diesel-powered generator and hydrogen system was proposed for RPS Kemar community. Load profile data was collected from previous research papers. This project aims to input this data into the Hybrid Optimization of Multiple Energy Resources (HOMER) Pro software to conduct an in-depth analysis of load power consumption in the village, especially considering the additional usage of hydrogen. Additionally, sensitivity analysis was performed to determine how the growth of load profile impacts the best configuration. The optimization results indicate that the PV-Gen-Batt system remain the best choice. It has a lower Net Present Cost and greater use of renewable energy compared to other configurations.

1. Introduction

A goal outlined in the United Nations Development Program's Sustainable Development Goals (SDGs) is to attain widespread access to affordable electricity by 2030. Nevertheless, delivering electricity to distant areas, such as remote islands, via power grid transmission results in significant energy loss and high costs [13]. Renewable energy is essential for sustainable development and

* *Corresponding author*
E-mail address: azlinazmi@uitm.edu.my

https://doi.org/10.37934/araset.61.2.194203

meeting global energy demands. This proposal explores using Hybrid Renewable Energy System (HRES) for rural electrification, focusing on the RPS Kemar community in Perak. In promoting sustainable development and addressing environmental challenges, renewable energy sources are crucial for meeting global energy demands. Renewable energy technologies, such as solar, wind and hydroelectric power, can provide clean, sustainable and cost-effective energy to communities worldwide.

RPS Kemar comprising 16 villages with 276 houses and 3,093 villagers face challenges in accessing reliable electricity [2]. Due to the enhanced dependability of fossil fuels for energy, there has been a significant rise in the electrical loads across the community [1]. This growing in demand highlights the urgent need for a sustainable and reliable energy solution. This project explores using a HRES that combines solar photovoltaic (PV) system, battery, diesel-powered generator and hydrogen system to meet the specific energy needs of the RPS community. The proposed HRES, which combine solar photovoltaic (PV) system with other energy sources, which are battery and diesel-powered generator and hydrogen offer a promising solution to the unique energy needs of remote and off-grid communities.

To meet the specific energy needs of the RPS Kemar community, this project proposes implementing a HRES. This system will automatically combine a solar PV system, battery, diesel-powered generator with additional hydrogen system to provide a consistent and reliable power supply. By integrating these components, the HRES can effectively harness renewable energy from the sun while ensuring continuous power availability through battery, diesel-powered generator and the hydrogen system [5]. This approach reduces dependence on fossil fuels and minimizes the environmental impact of energy generation.

As we begin this journey of exploration and innovation, the primary goal is to justify the necessity of integrating a hydrogen system into the existing configurations developed by Tenaga Nasional Berhad (TNB) [2]. Besides, another goal is to present a comprehensive framework for the successful integration of solar hybrid systems in remote areas using HOMER software. This framework aims to foster a sustainable and self-reliant energy ecosystem for the RPS Kemar community in Perak [5]. Additionally, this study aspires to contribute to the broader discourse on renewable energy solutions and empower communities to embrace clean and sustainable sources of power. By providing reliable and affordable electricity, this project aims to enhance the quality of life for the RPS Kemar community, promote socio-economic development and support environmental sustainability.

Using HOMER software for analysis and modelling, the research aims to design an optimal system for reliable power supply, considering the economic and environmental dynamics of the RPS community in Perak [4]. The study focuses on component sizing, capacity, operational mode, material choices, cost minimization and emission reduction to create an effective HRES [20]. The main goal is to present a comprehensive framework for the successful integrating of solar hybrid systems in remote areas, fostering a sustainable and self-reliant energy ecosystem [5]. Additionally, this study aims to add to the wider discussion on renewable energy solutions and empower communities to embrace clean and sustainable power sources for a resilient future [12].

The successful implementation of HRES in remote areas can serve as a model for similar communities facing energy access challenges. By demonstrating the viability and benefits of this approach, the research can encourage policymakers, stakeholders and other communities to adopt renewable energy solutions. The insights gained from this study can inform future sustainable energy initiatives, guiding efforts to design and deploy effective HRES that meet the diverse needs of remote and off-grid communities.

Despite the global push for renewable energy, many remote areas, including the RPS Kemar community in Perak, still struggle with reliable and affordable electricity access. While solar hybrid

systems have shown potential, there is a lack of comprehensive studies that address their application in specific local contexts, especially in balancing technical, environmental and socio-economic factors. This gap highlights the need for tailored energy solutions that consider the unique needs and challenges of these communities. This study is significant as it not only explores the feasibility of solar hybrid systems but also contributes to Malaysia's broader sustainable development goals and the achievement of affordable electricity access by 2030, in alignment with the SDGs. By employing a multidisciplinary approach and advanced modelling techniques, the study aims to design an optimal solar hybrid system for the RPS Kemar community, providing a sustainable, reliable and cost-effective energy solution.

2. Methodology

2.1 Data Collection

The data was gathered at RPS Kemar, Gerik, Perak, Malaysia (05°12.1'N,101°23.8'E). This project aims to design a HRES system using solar photovoltaic (PV) system, diesel-powered generators and hydrogen system in this area. This country has two seasons which are dry season and wet season. The data collected for this study includes load profile, solar radiation and temperature. Figure 1 show the location of the area.

Fig. 1. Location of the area

2.2 Load Profile

The load profile can be categorized as community loads in RPS Kemar, Gerik as it consists of 16 villages including few buildings such as school, police station and shop. The daily load profile for RPS Kemar was obtained from the previous research paper with assumptions were performed on various types of appliances used by people in the community. Based on the Kementerian Kemajuan Desa dan Wilayah (KKLW)'s requirement, each house will consume 8 kWh of energy with a maximum demand (MD) of 1 kW [2]. The load profile was forecasted from previous similar experiences, estimates an overall MD of 364 kW and energy consumed per day 3013 kWh/day.

2.3 Solar Radiation & Temperature

The solar radiation & temperature data for RPS Kemar, Gerik, Perak was collected from the NASA Prediction of Worldwide Energy Resource database as shown in Figure 2 and Figure 3. The solar radiation was analysed to see how much energy the solar panels could generate. The annual average measured temperature for RPS Kemar, Gerik was 23.30 °C.

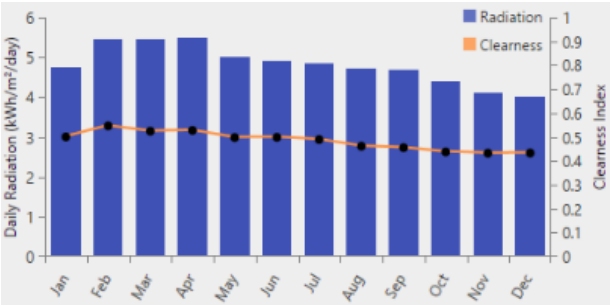

Fig. 2. Average solar radiation

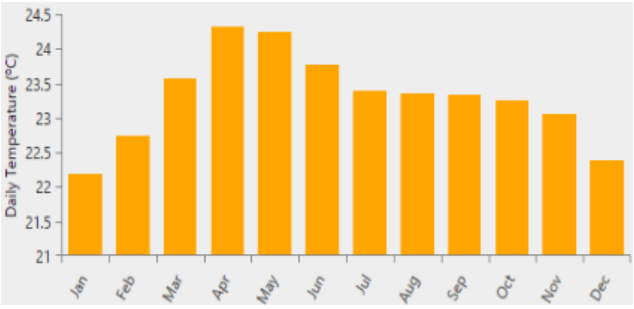

Fig. 3. Average temperature

2.4 Hybrid Optimization of Multiple Energy Resources (HOMER) Software

Due to its capabilities in simulating and optimizing hybrid power systems, HOMER software was chosen to study on how to design Hybrid Renewable Energy Systems (HRES) for the RPS Kemar community. It was used to simulate and find the best setup for the community.

2.5 Input Monitoring Parameters of the HOMER Software

The input parameters for HOMER's software include economic data such as the current diesel price of RM2.15 per litre detailed in Table 1.

Table 1
Economic data

Economic Input	Value
Discount rate (%)	8.00
Inflation rate (%)	2.90
Project Lifetime (Years)	25
Currency	Malaysian Ringgit (RM)

Meanwhile in Table 2, the constraints data were fed into the software where the Kementerian Kemajuan Desa dan Wilayah (KKLW) mandates that at least 70% of the energy produced must come from solar energy.

Table 2
Constraints data

Constraints Input	Value
Minimum renewable fraction (%)	70.00

2.6 Sensitivity Analysis

In the HOMER software, sensitivity analysis examined factors affecting the system's performance, including the average annual load profile. Anticipating a rise in RPS Kemar's population, the average yearly load profile was predicted to increase by 3%, 6% and 9% respectively due to heightened energy demand. The diesel price remained capped throughout the research project. The monitored variables are listed in Table 3.

Table 3
Load growth

No	Sensitivity Variables	Value 1 (0%)	Value 2 (3%)	Value 3 (6%)	Value 4 (9%)
1	Annual average load profile (kWh per day)	3,013	3,103	3,194	3,284

2.7 HRES Design & Configuration

The HRES model within the HOMER software consists of seven main components as depicted in the figure below. Table 4 shows specific details for each component. Figure 4 presents a proposed HRES configuration.

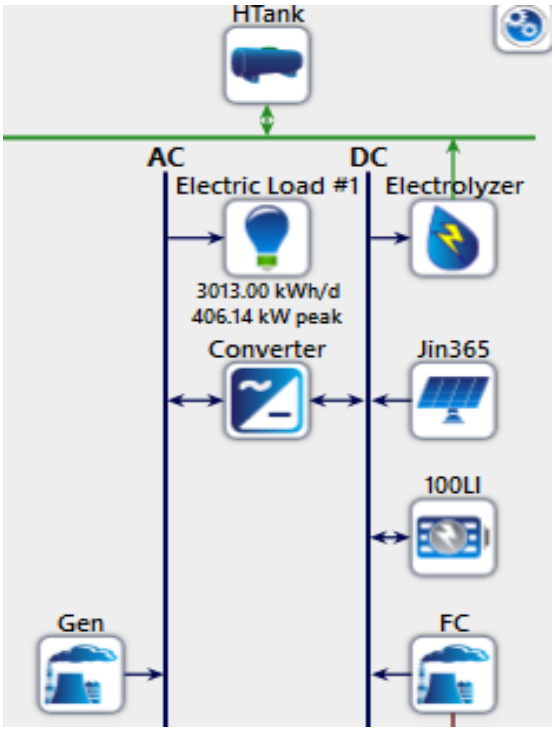

Fig. 4. HRES design & configuration

The types of the PV modules used in this project proposal was Jinko Solar. The efficiency of these PV modules was 13%. Several types of PV modules were evaluated to allow the HOMER software to identify the optimal configuration for the proposed project. Additionally, the HOMER software was also determined the converter size based on the PV module size to maximize output efficiency. The initial cost and the replacement cost of this solar PV are same, which is RM10,590.75. According to past research, the operation and maintenance cost is RM1,129.68 [14].

Diesel-powered generators were used to meet the load demand and charge the battery when solar energy was insufficient. An auto size generator was employed for this research, costing RM2,353.50 initially and the same amount for replacement. Its operational and maintenance cost, based on previous research is RM0.14 per hour [7]. This diesel-powered generator has a lifespan of 15 years. The current diesel price at fuel stations is RM2.15 per Liter.

The specific model used is a generic system converter, optimized for rated capacity by the HOMER software. Initial purchase cost is RM1,412.10. with replacement cost has the same amount. Annual operation and maintenance expenses total RM14.12 [21].

The HRES powers the electrolyser for electrolysis, separating water into hydrogen and oxygen. The produced hydrogen is stored and later used in a fuel cell to generate electricity and heat, ensuring

a reliable, renewable energy supply. The overall initial capital and replacement cost of the hydrogen system is RM37,939.32 meanwhile the operation & maintenance cost is RM94.38 [21].

Lithium-ion batteries were used as the energy storage solution for the PV modules, providing extra power during power outages or periods of low solar irradiation. The expected lifespan of these batteries is 15 years and the proposed system includes 25 batteries, initially costing RM70,000.00 each. Replacement cost is also RM RM70,000.00, with annual operation and maintenance expenses for this battery are RM 1,000.00 [14].

Table 4
Technical and economic specification of components used

Description	Specification
1. Solar photovoltaic (PV) ZJinko Solar365JKM365M-72]	
Size Considered (kW)	8.00
Capital cost (RM per kW)	10,590,75
Replacement cost (RM per kW)	10,590,75
Operation and maintenance cost (RM per kW)	1,129.68
Lifetime (Years)	25
Derating Factor (%)	77
2. Diesel-powered Generator	
Capital cost (RM per kW)	2,353.50
Replacement cost (RM per kW)	2,353.50
Operation and maintenance cost (RM per hour)	0.14
Lifetime (Hours)	15,000
3. Converter	
Size Considered (kW)	1
Capital cost (RM per kW)	1,412.10
Replacement cost (RM per kW)	1,412.10
Operation and maintenance cost (RM per year)	14.12
Lifetime (Years)	15
4. Hydrogen Tank	
Capital cost (RM per kg)	2,824.20
Replacement cost (RM per kg)	2,824.20
Operation and maintenance cost (RM per year)	47.07
Lifetime (Years)	25
5. Electrolyzer	
Capital cost (RM per kW)	7,060.50
Replacement cost (RM per kW)	7,060.50
Operation and maintenance cost (RM per year)	47.07
Lifetime (Years)	15
6. Fuel Cell	
Capital cost (RM per kW)	9,414.00
Replacement cost (RM per kW)	8,755.92
Operation and maintenance cost (RM per hour)	0.24
Lifetime (Hours)	50,000
7. Storage Battery [Generic 100KWh Li-Ion]	
Capital cost (RM per kW)	70,000.00
Replacement cost (RM per kW)	70,000.00
Operation and maintenance cost (RM per hour)	1,000.00
Specifications	600 V, 167 Ah

3. Results and Analysis

3.1 Optimization Results

In HOMER software, simulations were conducted to identify the best power generation system for RPS Kemar based on cost-effectiveness using Net Present Cost (NPC). The top-ranked system identified as the most efficient and economical, effectively meeting electric load demands and user constraints with the lowest NPC throughout its lifespan [17]. Detailed simulation outcomes are categorized in Table 5 and Table 6 offering insights into system performance, efficiency and cost-effectiveness, facilitating a thorough evaluation of the optimal configuration.

Table 5
Optimization results

No	Configurations	PV (kW)	Gen (kW)	FC (kW)	Batt	Electro (kW)	HTank (kg)	Conv (kW)	NPC (RM)	COE (RM)	Operating cost (RM/yr)	Initial Capital (RM)	RF (%)
1	PV-Gen-Batt	687	450		25			302	30.1 M	1.93	1.38M	10.5M	70.1
2	PV-Gen-FC-Batt-Electro-HTank	773	450	250	33	100	100	374	32.9 M	2.11	1.23M	15.4M	70.2
3	PV-Batt	2628			52			488	76.7 M	4.93	3.15M	32.2M	100

Table 6
Amount of excess electricity, CO_2 emission & abatement cost

No	Configurations	Excess Electricity (%)	Excess Electricity (kWh/yr)	CO_2 Emission (kg/yr)	Abatement Cost (RM/tCO2)
1	PV-Gen-Batt	1.12	13,453	257,306	117,000
2	PV-Gen-FC-Batt-Electro-HTank	3.68	48,426	218,735	150,000
3	PV-Batt	63.7	2,126,059	0	0

3.2 Economic and Environmental Analysis

Three optimal configurations were suggested and compared to identify the best possible system. Configuration 1 consists of solar PV, diesel-powered generator and battery. Configuration 2 includes solar PV, diesel-powered generator, battery, fuel cell, electrolyser and hydrogen tank. Configuration 3 comprises only solar PV and battery only.

Among these three, Configuration 1 emerged as the most feasible system as HOMER prioritizes the lowest Net Present Cost (NPC), which is RM30.1 million, outperforming the other two configurations [16]. This setup also meets the Kementerian Kemajuan Desa dan Wilayah (KKLW)'s requirement of a minimum 70% renewable fraction to supply the load, achieving 70.1%, with 687kW coming from solar PV and the remainder from the battery, generator and converter. The NPC of the optimal system depends on the initial capital costs of the components considered by HOMER [9,17]. Increasing the size of solar PV, the second most expensive component, directly impact the NPC. In Configuration 1, where HOMER deems 687kW of solar power sufficient to meet the load demand, a smaller solar PV size compared to Configurations 2 and 3 results in the lowest NPC. The inclusion of batteries in Configuration 1 helps reduce the NPC by providing backup power, reducing the diesel generator's operation and fuel consumption [8]. Both Configuration 1 and Configuration 2 generate

450kW of energy. However, Configuration 1 emits higher carbon emissions, at 257,306 kg/yr, due to diesel-powered generators used, whereas Configuration 2 emits 218,735 kg/yr, with a hydrogen system. Despite Configuration 1's higher CO_2 emissions compared to Configuration 2, its abatement cost is lower, at 117,000.00 RM/tCO2 due to cheaper NPC. Despite environmental risks, Configuration 1 is preferred as HOMER prioritizes the lowest NPC [3].

Configuration 2 incorporates a hydrogen system, which includes a hydrogen tank, electrolyser and fuel cell, along with solar PV, battery storage and a diesel generator. Despite meeting the KKLW's required renewable fraction of 70.2%, its NPC is slightly higher than Configuration 1, due to costly hydrogen components. The hydrogen system's capital cost totals RM19,298.70, contributing to NPC of RM32.9 million. With abatement cost of 150,00 RM/tCO2 and lower CO_2 emissions at 218,735 kg/yr, Configuration 2 balances cost and environmental impact. However, it is the most cost-effective option for the community, although it presents a promising alternative hydrogen system costs decrease over time [10].

Configuration 3, comprising solar PV, battery and converter, records the highest NPC at RM76.7 million, significantly exceeding other configurations. This high NPC is mainly attributed to the substantial initial required for 2628kW of solar energy to meet the community's load demand. Despite its environmental friendliness with no CO_2 emissions, it is economically impractical due to its high cost and failure to meet the KKLW's requirement of 70% renewable energy supply, relying solely on renewable sources [15].

3.3 Sensitivity Analysis Result

In the HOMER software, sensitivity analysis examined various variables related to the proposed system's operation to identify optimal configurations under annual load growth rates of 3%, 6% and 9%, using baseline data, with no load growth for comparison. The analysis highlights the differing impacts of load growth on system performance and environmental considerations, as shown in Table 7 below.

In the second scenario of load growth, daily demand reaches 3103 kWh, a 3% increase. The configuration uses PV-Gen-Batt-Conv, with solar PV capacity increased to 797 kW and adjustments to batteries and converter sizes. This expansion allows for more energy storage, reducing CO2 emissions by decreasing diesel generator use during peak demand [6]. The Net Present Cost (NPC) rises to RM31.1 million due to added investments in batteries and converters.

In the third scenario, daily demand reaches 3194 kWh, a 6% increase. The same configuration is used, but with slightly reduced capacities for solar PV, batteries and converters. This optimized setup meets the new demand but with less energy storage capacity, resulting in increased diesel generator operation, higher diesel consumption and CO2 emissions. The NPC for this scenario is RM31.8 million.

Daily demand ranging from 3013 kWh to 3284 kWh results variations in NPC, Cost of Energy (COE) and CO2. Load growth 1 has the lowest NPC at RM31.5 million, while load growth 4 has the highest at RM32.5 million. Solar PV capacity and battery numbers increase slightly, maintaining renewable fractions around 70.1% to 70.3%. Higher CO2 emissions in load growth 4 highlight increased reliance on diesel generators with rising demand.

In conclusion, the current configuration is robust and capable of can accommodate projected increases in load demand of 3%, 6% and 9% per day, handling varying degrees of increased demand without requiring immediate overhauls or significant adjustments.

Table 7
Sensitivity analysis result

Load Growth (kWh/d)	Multiplier	Configuration	PV (kW)	Gen (kW)	Batt	Conv (kW)	NPC (RM)	COE (RM)	RF (%)	CO_2 Emission (kg/yr)
3013	1.00	PV-Gen-Batt-	687	450	25	302	30.1M	1.93	70.1	257,306
3103	1.03	PV-Gen-Batt-	797	450	39	411	31.1M	1.93	70.3	224,479
3194	1.06	PV-Gen-Batt-	741	450	24	369	31.8M	1.93	70.3	269,084
3284	1.09	PV-Gen-Batt-	751	450	26	313	32.5M	1.91	70.1	278,730

4. Conclusion

The study analysed three optimal configurations for the RPS Kemar community's energy needs: PV-Gen-Batt (Configuration 1), PV-Gen-HTank-FC-Electro-Batt (Configuration 2) and PV-Batt (Configuration 3). Configuration 1 emerged as the most feasible option, with the lowest Net Present Cost (NPC) of RM30.1 million, while meeting the renewable energy requirement of at least 70%. Despite higher carbon emissions due to reliance on a diesel generator, Configuration 1 outperformed the others in cost-effectiveness, with the lowest abatement cost of 117,000 RM/tCO2. Configuration 2, though environmentally better with lower CO2 emissions due to its hydrogen system, had a higher NPC of RM32.9 million. Configuration 3, while fully renewable, was economically impractical with a NPC of RM76.7 million.

The study concludes that integrating a hydrogen system presents significant economic challenges due to high costs. Maintaining the existing configuration without integrating hydrogen is more financially viable for now. However, there is optimism that advancements in hydrogen technology and cost reductions could enhance its future feasibility [11,18]. This underscores the importance of ongoing monitoring and reassessment of energy solutions to capitalize on emerging technologies. While Configuration 1 offers a balanced and reliable approach, future work should include exploring hybrid configurations to further reduce carbon emissions and maintain economic viability, ensuring optimal performance and cost-effectiveness for the community's energy needs [19].

Acknowledgement
This research was not funded by any grants. The authors are grateful to the researchers whose work has greatly influenced this study. In particular, the studies by Aziz *et al.,* [2] have provided a foundational basis for our research. Their pioneering efforts and valuable insights have been instrumental in shaping the direction scope of this paper. Special thanks to Universiti Teknologi MARA as well for providing the necessary resources and facilities to conduct this research.

References
[1] Agajie, Takele Ferede, Ahmed Ali, Armand Fopah-Lele, Isaac Amoussou, Baseem Khan, Carmen Lilí Rodríguez Velasco and Emmanuel Tanyi. "A comprehensive review on techno-economic analysis and optimal sizing of hybrid renewable energy sources with energy storage systems." *Energies* 16, no. 2 (2023): 642. https://doi.org/10.3390/en16020642

[2] Aziz, K. A. and K. N. Shamsudin. "TNB experience in developing solar hybrid station at RPS kemar, gerik, perak darul ridzuan." In *IOP Conference Series: Earth and Environmental Science*, vol. 16, no. 1, p. 012145. IOP Publishing, 2013. https://doi.org/10.1088/1755-1315/16/1/012145

[3] Bismark, Kent Marc Kobe C., Lorenzo Gabriel C. Caballa, Christine Monique F. Yap, Robert Alfie S. Peña, Raymark C. Parocha and Erees Queen B. Macabebe. "Optimization of a hybrid renewable energy system for a rural community using PSO." In *IOP Conference Series: Earth and Environmental Science*, vol. 1199, no. 1, p. 012034. IOP Publishing, 2023. https://doi.org/10.1088/1755-1315/1199/1/012034

[4] Dahlan, Nofri Yenita, Nor Azliana Abdullah, Nor Shahida Razali, Vigna Kumaran Ramachandaramurthy and Bakhtiar Alrazi. "Assessing socio and techno-economic impacts of hybrid renewable energy system with energy

storage for a rural development in malaysia." *International Journal of Renewable Energy Research (IJRER)* 11, no. 2 (2021): 673-690.

[5] Fadzli, Nur Farzana Athirah Mohd, Azlin Mohd Azmi, Nofri Yenita Dahlan, Zubir Ahmad Mohd Ismail and Sreenath Sukumaran. "An Analysis of Hybrid Renewable Energy System Using HOMER Pro: A Case Study in Sungai Tiang Camp, Perak." *Journal of Advanced Research in Applied Sciences and Engineering Technology* 31, no. 3 (2023): 79-92. https://doi.org/10.37934/araset.31.3.7992

[6] Fathima, A. Hina and K. Palanisamy. "Optimization in microgrids with hybrid energy systems–A review." *Renewable and Sustainable Energy Reviews* 45 (2015): 431-446. https://doi.org/10.1016/j.rser.2015.01.059

[7] Singh, Jasspeed, W. Md Syarifuddin Wan Azmi, W. Irsyad Izzuddin Wan Azmi, M. Haziq Hazalan, Fatihah Attassa Hartawan and Nurfarah Atikah Khairul Anuar. "Optimal Hybrid Renewable Energy System Design for a Village in Perak, Malaysia." *Malaysian Journal of Science and Advanced Technology* (2021): 36-40. https://doi.org/10.56532/mjsat.v1i2.7

[8] John, Cyril Anak, Lian See Tan, Jully Tan, Peck Loo Kiew, Azmi Mohd Shariff and Hairul Nazirah Abdul Halim. "Selection of renewable energy in rural area via life cycle assessment-analytical hierarchy process (LCA-AHP): A case study of Tatau, Sarawak." *Sustainability* 13, no. 21 (2021): 11880. https://doi.org/10.3390/su132111880

[9] Julai, Norhuzaimin and Yonis M. Yonis Buswig. "Hybrid renewable system based pumped energy storage for the electrification of rural areas." In *2020 13th International UNIMAS Engineering Conference (EnCon)*, pp. 1-6. IEEE, 2020. https://doi.org/10.1109/EnCon51501.2020.9299334

[10] Khan, Tahir, Miao Yu and Muhammad Waseem. "Review on recent optimization strategies for hybrid renewable energy system with hydrogen technologies: State of the art, trends and future directions." *International Journal of Hydrogen Energy* 47, no. 60 (2022): 25155-25201. https://doi.org/10.1016/j.ijhydene.2022.05.263

[11] Li, Guoliang, Benfeng Yuan, Min Ge, Guoping Xiao, Tao Li and Jian-Qiang Wang. "Capacity configuration optimization of a hybrid renewable energy system with hydrogen storage." *International Journal of Green Energy* 19, no. 14 (2022): 1583-1599. https://doi.org/10.1080/15435075.2021.2018323

[12] Li, Jinze, Pei Liu and Zheng Li. "Optimal design and techno-economic analysis of a hybrid renewable energy system for off-grid power supply and hydrogen production: A case study of West China." *Chemical Engineering Research and Design* 177 (2022): 604-614. https://doi.org/10.1016/j.cherd.2021.11.014

[13] Li, Lanyu, Siming You and Xiaonan Wang. "Optimal design of standalone hybrid renewable energy systems with biochar production in remote rural areas: a case study." *Energy Procedia* 158 (2019): 688-693. https://doi.org/10.1016/j.egypro.2019.01.185

[14] Sabudin, Muaz Izzuddeen, Mohd Noor Syawal Mustapha, Muhammad Adzim Mohd Rozi and Devaraj Tharuma Rajah. "Design of Hybrid Renewable Energy Systems for a Village in Selangor, Malaysia." *Malaysian Journal of Science and Advanced Technology* (2021): 1-5. https://doi.org/10.56532/mjsat.v1i1.1

[15] Nallolla, Chinna Alluraiah and Vijayapriya Perumal. "Optimal design of a hybrid off-grid renewable energy system using techno-economic and sensitivity analysis for a rural remote location." *Sustainability* 14, no. 22 (2022): 15393. https://doi.org/10.3390/su142215393

[16] Rehman, Shafiqur, Habib Ur Rahman Habib, Shaorong Wang, Mahmut Sami Büker, Luai M. Alhems and Hassan Zuhair Al Garni. "Optimal design and model predictive control of standalone HRES: A real case study for residential demand side management." *IEEE Access* 8 (2020): 29767-29814. https://doi.org/10.1109/ACCESS.2020.2972302

[17] Rozlan, M. B. M., A. F. Zobaa and SHE Abdel Aleem. "Integration of Stand Alone Hybrid Renewable Energy Systems Optimisation using HOMER." *International Review of Electrical Engineering (IREE)* (2007).

[18] Schoene, Nikolas and Boris Heinz. "Semi-systematic literature review on the contribution of hydrogen to universal access to energy in the rationale of sustainable development goal target 7.1." *Energies* 16, no. 4 (2023): 1658. https://doi.org/10.3390/en16041658

[19] Thirunavukkarasu, M., Yashwant Sawle and Himadri Lala. "A comprehensive review on optimization of hybrid renewable energy systems using various optimization techniques." *Renewable and Sustainable Energy Reviews* 176 (2023): 113192. https://doi.org/10.1016/j.rser.2023.113192

[20] Wali, Safat Bin. "Cost optimization and economic analysis of a standalone hybrid renewable energy storage system in Malaysia." *Journal of Energy and Environment* (2020).

[21] Wong, Millenium, Hadi N. Afrouzi, Ateeb Hassan, Elammaran Jayamani, Jalal Tavalaei, Jaka Sunarso and Kamyar Mehranzamir. "Design and Techno-Economic Analysis of a Hydrogen-Based Micro Hydro-Solar Hybrid Energy System for Sustainable Energy Access: A Case Study in Sri Aman, Sarawak." (2024).