SEMARAK ILMU PUBLISHING

Journal of Advanced Research in Fluid Mechanics and Thermal Sciences

Journal homepage:
https://semarakilmu.com.my/journals/index.php/fluid_mechanics_thermal_sciences/index
ISSN: 2289-7879

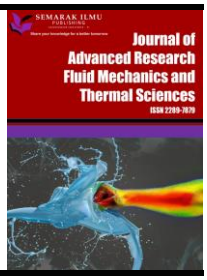

Static Analysis of Low Temperature Waste Heat Driven Three-bed Adsorption Chillers Potential for Building Cooling Application

I Gusti Agung Bagus Wirajati[1], I Dewa Made Cipta Santosa[1,*], Made Ery Arsana[1], Takahiko Miyazaki[2]

[1] Department of Mechanical Engineering, Politeknik Negeri Bali, Jalan Kampus Bukit, Jimbaran, South Kuta, Badung Regency, Bali 80364, Indonesia
[2] Department of Advanced Environmental Science and Engineering, Faculty of Engineering Science, Kyushu University, 744 Motooka Nishi-ku Fukuoka, 819-0395, Japan

ARTICLE INFO

Article history:
Received 2 August 2023
Received in revised form 28 November 2023
Accepted 16 December 2023
Available online 31 December 2023

Keywords:
Environmentally friendly cooling system; adsorption; condensation heat; silica-gel; building cooling system

ABSTRACT

The adsorption cooling system is an environmentally friendly system because of non-CFCs (chlorofluorocarbons) and non-HCFCs (hydrochlorofluorocarbons). The simulation developed is an adsorption system that can operate with a low temperature waste heat source so that this adsorption system can be applied to building cooling systems. The purpose of this research is to obtain the most effective and efficient cycle of three bed silica gel-water adsorption system with a low temperature heat source so that it has the potential for building applications. The method developed is by simulating various design combinations of three bed adsorption systems and simulating 6 (six) cycle types. Furthermore, those designs of silica gel-water based two different types of three-bed adsorption chiller has been analyzed statically. The performance of the chillers was investigated in terms of coefficient of performance (COP) and specific cooling effect (SCE) for heat source temperature between 60°C and 90°C. The result first shows that the performance data of the proposed chillers (Cycle E and Cycle F) were compared with those of other four different types of three-bed adsorption chiller with the same operating conditions. It was observed that the proposed chillers provided a higher SCE compared with other four assorted chillers. Second result show that The Cycle B obtained the higher COP comparing with the other cycles designed in this study. Thus, this system has a good potential to be developed for building cooling systems by utilizing heat waste.

1. Introduction

Over the last few decades considerable efforts have been given to use adsorption (solid/vapor) for cooling and heat pump applications to comply with the international restrictions on production and utilization of CFCs (chlorofluorocarbons) and HCFCs (hydrochlorofluorocarbons). Adsorption cooling systems are environmentally friendly as both the ozone layer depletion potential and global worming potential are zero due to use of natural refrigerant, e.g., silica gel-water, and due to ability

* *Corresponding author.*
E-mail address: idmcsantosa@pnb.ac.id

https://doi.org/10.37934/arfmts.112.2.174190

of utilizing the low temperature waste heat or solar energy. In other hand, solar energy as renewable energy has also become a road map for energy development in various countries, including Malaysia, and development of solar collector technology is positive such as the thermal efficiency of MWCNT nanofluids increases by optimization at a certain fluid flow rate [1,2]. The adsorption chiller system is also one of the most promising technologies that utilize waste heat to produce cooling water and drinking water simultaneously. And the case studies conducted show that the adsorption chiller system can produce significant energy-saving performance [3]. Waste heat driven silica gel-water based two-bed adsorption chillers was modeled in commercialized chiller which determine the optimal cycle time with recovery duration required for cooling load, and also to provide maximum efficiency under operating conditions. This is good progress for adsorption chiller technology which can apply for commercial building cooling [4]. Since buildings in general in tropical countries are still inefficient in terms of energy consumption [5].

Silica gel -water adsorption technology with the low temperature heat source has been previously studied with various models and types. Xia *et al.,* [6] conducted studies on a new silica gel-water adsorption chiller driven by hot water 60 °C –90 °C. This chiller integrates two single bed systems with only one vacuum valve. The results show that the chiller Coefficient of Performance (COP) is 0.39 for a heat source temperature of 82.5 °C, a cooling water temperature of 30.4 °C and a chilled water outlet temperature of 12 °C. Pan *et al.,* [7] investigated of the adsorption system for performance tests under solar hot water temperature (70 °C) on a small scale through a heat and mass Furthermore, Xu *et al.,* [8] also investigated on a low level heat source at 70 °C but investigated on an industrial scale. The experimental results show that the hybrid system can be driven effectively by a low-level heat source at 70 °C with a coolant at 30 °C and can achieve high efficiency in extracting a 70 °C heat source to meet the needs of cooling and dehumidification with performance coefficients can reach 0.539. In addition, Younes *et al.,* [9] calculate COP of adsorption cooler at normal capacity. The optimum value is obtained at 94 °C hot water, 15 °C cold water, and 35 °C condensation temperature. The lowest COP and normalized capacity values were recorded at 65 °C hot water, 7 °C cold water, and 38 °C condensation temperature.

Furthermore, a new approach to predict heat and mass transfer in the adsorption layer of cooling and desalination systems has been carried out using artificial intelligence methods. The innovative concept of applying a fluidized bed was introduced to overcome the poor heat and mass transfer as well as the low performance of adsorption coolers that exist with conventional packing systems [10]. Because increasing the heat transfer coefficient of the adsorption cooling system is very urgent to implement because of its ability to be driven by heat that is close to ambient temperature. In addition, artificial intelligence (AI) approaches for adsorption cooling optimization studies have also been introduced and are very relevant ideas [11,12]. Thus, the coefficient of performance (COP) of the three-bed adsorption cooler with desalination function, using silica gel and water as working pairs increases from 0.20 to 0.58 when the heating water temperature increases from 57 to 85 °C, and it is concluded that the heating water greatly affects the performance of the adsorption chiller [12].

In recent year, building cooling applications is continuous increase in energy demand. The adsorption chiller system driven by solar energy is very effective used, especially in sub-tropical to tropical regions [13]. The commercial building sector is progressively using more energy as the economy grows rapidly, thus promoting Building Energy Efficiency (BEE). A solid energy saving strategy can be implemented if early prevention is carried out, including the use of heat recovery [14]. In a case of building solar adsorption air conditioner, when the hot water temperature is lower a longer mass recovery time is required for re-adsorption from the cold adsorbent bed and re-desorption from the hot adsorbent bed. The COP can be up to 0.53 [15]. Solar single effect vapor absorption systems are designed to meet the cooling demands of a building. Solar insulation at a

location is used as a heat source for the heat input of an absorption chiller generator. The hot water temperature to the generator (heat supplied) is kept constant at 85°C. The genset load required to meet various cooling loads is achieved by controlling the solution pump flow rate in the absorption system. Further simulations were carried out from an economic perspective, costs and space required for the installation of the power plant is still challenging compared to conventional systems [16,17].

Thus, adsorption chiller technology has received much attention in recent decades because of its advantages in utilizing low levels of thermal energy and environmentally friendly refrigerants. However, it has not been widely commercialized due to the low coefficient of performance (COP) and low specific cooling power (SCP) compared to conventional refrigeration technologies [18]. So, this research aims to get the best design for a three-bed adsorption chiller that can use low temperature heat recovery so it is very suitable for building cooling applications, where the building also has a heating system (boiler) for hot water supply which can be used as a heat source. Furthermore, the design of two different types of three-bed adsorption chiller has been proposed and the ideal performance was investigated statically in terms of coefficient of performance (COP) and specific cooling effect (SCE) for different heat source temperature from 60 ^{o}C to 90 ^{o}C. Silica gel and water have been chosen as an adsorbent adsorbate pair because the regenerative temperature of silica gel is lower than some other adsorbents and water has large latent heat of vaporization. Finally, the performance was compared with that of other four different types of three-bed adsorption chillers considering the same operating conditions.

2. Methodology

2.1 Three-Bed Adsorption Chiller Model Cycle

The three-bed adsorption chiller model which has been simulated consists of three adsorber/desorber heat exchangers namely Bed 1, Bed 2 and Bed 3, one evaporator and one condenser. In term of cycles type of the simulation consist of six type of adsorption chillers cycles namely, Cycle A, Cycle B, Cycle C, Cycle D, Cycle E and Cycle F and the schematic diagrams of the cycles are shown in Figure 1 to Figure 6, respectively. Firstly, Saha *et al.,* [19] proposed three-bed adsorption chiller, and the cycle identical with Cycle A (Figure 1) to utilize low temperature waste heat and found better performance compared with conventional two-bed adsorption systems. Significance of the chiller was that it could produce stabilized cooling effect as a result no fluctuation on chilled water temperature. Second, Khan *et al.,* [20] modified the chiller by adapting mass recovery process between Bed 1 and Bed 2, i.e., Cycle B (Figure 2). The mass recovery process enhanced the COP by increasing the evaporated refrigerant mass without any heat input. The mass recovery process is performed by interconnecting two beds for depressurizing-pressurizing after the desorption-adsorption process. The mass recovery cycle was effective for improving cooling power also, especially at relatively low driving temperatures. Third, Khan *et al.,* [21] was revised their system through adding mass recovery process between Bed 1-Bed 3 and Bed 2-Bed 3 instead of mass recovery only between Bed 1 and Bed 2, which is shown as Cycle C (Figure 3).

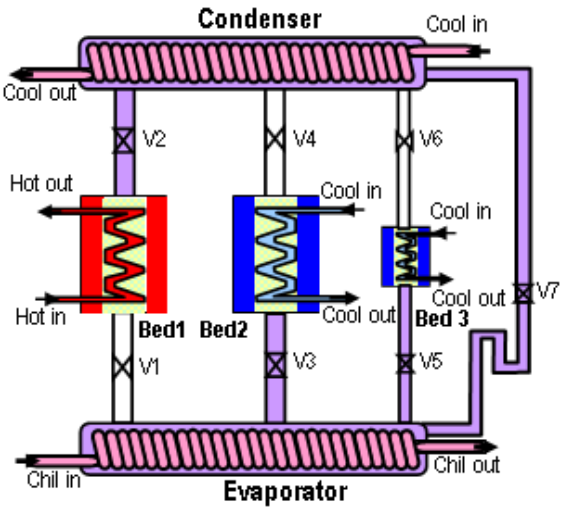

Fig. 1. Schematic diagram of three-bed adsorption chiller without mass recovery (Cycle A)

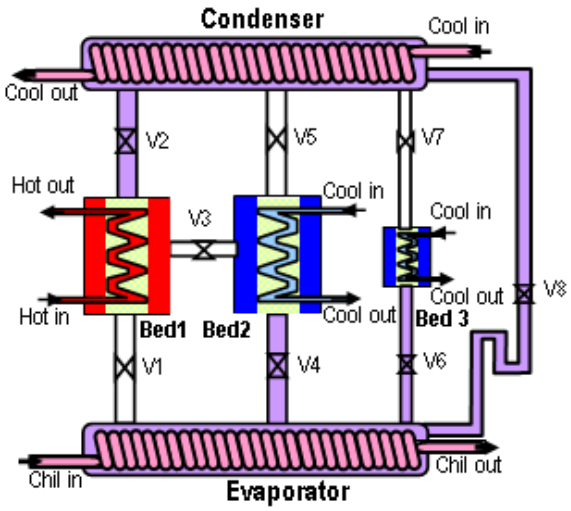

Fig. 2. Schematic diagram of three-bed adsorption chiller with mass recovery (Cycle B)

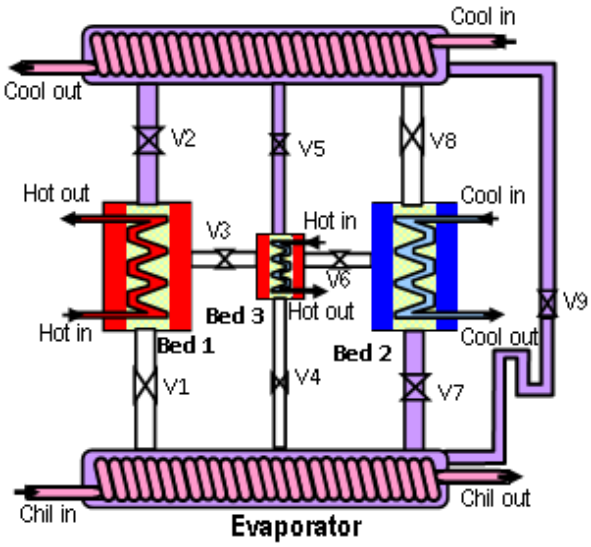

Fig. 3. Schematic diagram of three-bed adsorption chiller with modified mass recovery (Cycle C)

Furthermore, Uyun *et al.,* [22,23] designed a new adsorption system, Cycle D by adapting heat recovery as well as mass recovery process (Figure 4). Main difference between Cycle C and Cycle D was that, Bed 3 was connected with condenser in Cycle C, while it was always disconnected from condenser in Cycle D.

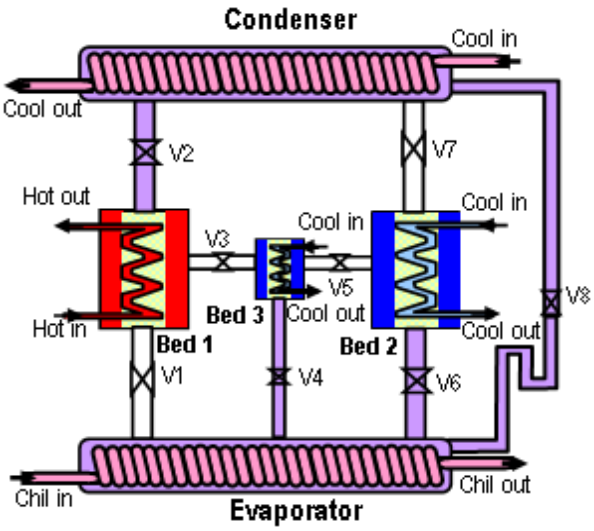

Fig. 4. Schematic diagram of three-bed adsorption chiller with a novel heat and mass recovery (Cycle D)

In the latter case Bed 3 desorbs the adsorbed vapor to Bed 1 or Bed 2 at same pressure. The process is different from mass recovery, however, because mass recovery only happens when two beds are in different pressure levels and then connected by each other. That is why in this study mass recovery process has been adapted between Bed 1 and Bed 2 and proposed a new design, which is Cycle E (Figure 5). The design of another cycle has also been proposed namely Cycle F, which is shown in Figure 6. In this case both Bed 1 and Bed 2 are fully disconnected from condenser and only desorbed the adsorbed vapor to the Bed 3 at the same pressure. Bed 1/Bed 2 is connected at the same pressure as Bed 3, and Bed 1/ Bed 2 are heated by hot water, while Bed 3 is cooled by cooling water to allow vapor transfer from a higher pressure bed to a lower pressure bed. Only Bed 3 will be connected with condenser and performs desorption, pre-cooling, adsorption, mass recovery cooling and pre-heating modes. On the other hand, Bed 1/Bed 2 perform only adsorption, mass recovery heating and pre-cooling modes. Bed 1 and Bed 2 are producing continuous cooling effect in the evaporator.

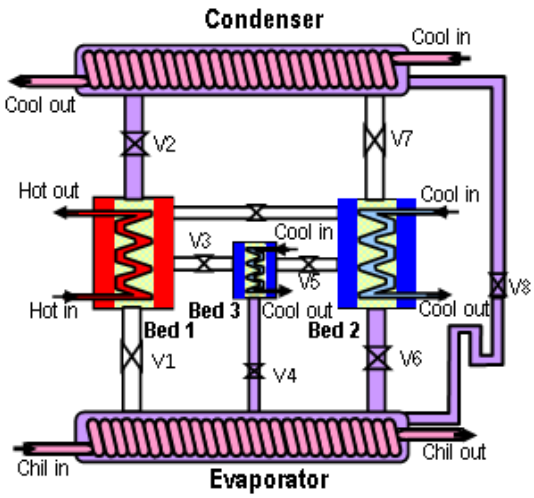

Fig. 5. Schematic diagram of a proposed three-bed adsorption chiller with mass recovery, Type 1
(Cycle E)

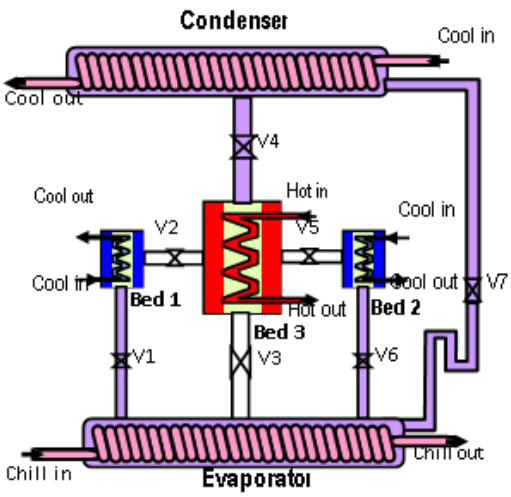

Fig. 6. Schematic diagram of a proposed three-bed adsorption chiller with mass recovery, Type 2 (Cycle F)

The operation modes and time allocation of each mode of Cycle E, are shown in Figure 7, which is fully different from cycle D and the operation mode and time allocation are shown in Figure 8.

The dimension of Bed 1 and Bed 2 is chosen as uniform and the size of Bed 3 is chosen as the half of Bed 1 or Bed 2 for all chillers except Cycle F. In addition, it was observed better performance when the size of Bed 3 was a half of that of other two-beds. For Cycle F, the size of Bed 1 and Bed 2 was identical and it was a half of that of Bed 3, but total mass of silica gel as well as total size of the beds were adjusted to be the same as those of the other chillers.

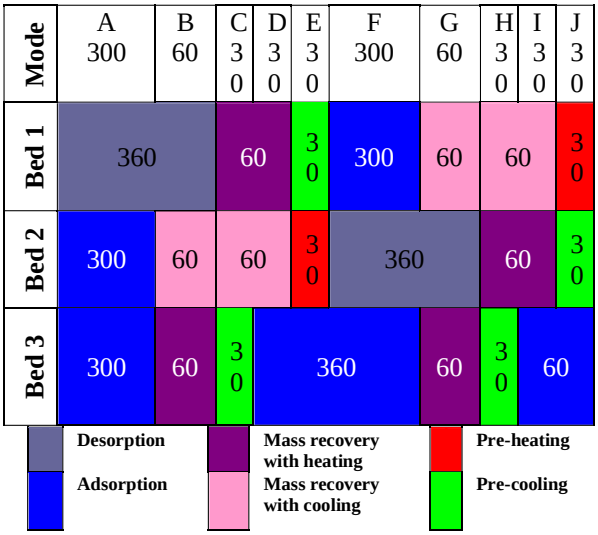

Fig. 7. Operation mode and time allocation of the proposed Cycle E (Sec.)

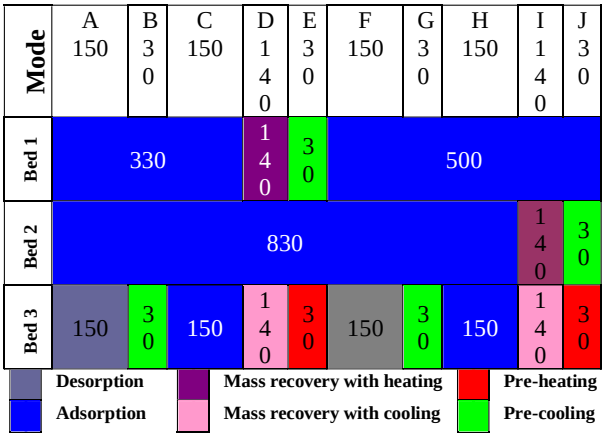

Fig. 8. Operation mode and time allocation of proposed cycle F (Sec.)

Standard working condition and basic input parameters were kept constant for all chillers are shown in Table 1 and Table 2, respectively.

Table 1
Standard working conditions

Heat transfer media	Inlet Temp. (°C)
Hot water	60-90
Cooling water (condenser/bed)	30
Chilled water	14

Table 2
Basic input parameters

Parameters	Value	Units
Q_{st}	2.80E+6	J/kg
C_w	4.18E+3	J/kg.K
L_w	2.50E+6	J/kg
C_s	924	J/kg.K
W_s	45	kg

2.2 Statics Calculation and Analysis of The Chillers

Duhring conceptual diagram at saturation stage in support of longer cycle time was considered to calculate the performance of adsorption chillers. Heat loss or gain due to ambient temperature difference was not considered in this calculation. The amount of water uptake by silica get at equilibrium state, can be expressed in Eq. (1) as follows [24]:

$$q = \frac{0.8 \times [P_s(T_w)/P_s(T_s)]}{1 + 0.5 \times [P_s(T_w)/P_s(T_s)]} \quad (1)$$

where $P_s(T_w)$ and $P_s(T_s)$ are the saturation pressure at temperatures T_W (water vapor) and T_S (silica gel), respectively.

Antoine's correlates for saturation pressure and temperature can be expressed in Eq. (2) as follow.

$$P_s = 133.32 \times \exp(18.3 - \frac{3820}{T - 46.1}) \quad (2)$$

Duhring diagram of Cycle A is shown in Figure 9, which has been drawn based on the operation mode of each bed of the system. According to adsorption cycle each bed follows pre-heating, desorption, pre-cooling and adsorption modes, which is indicated by the cyclic diagram a-b-c-d-a of Figure 9.

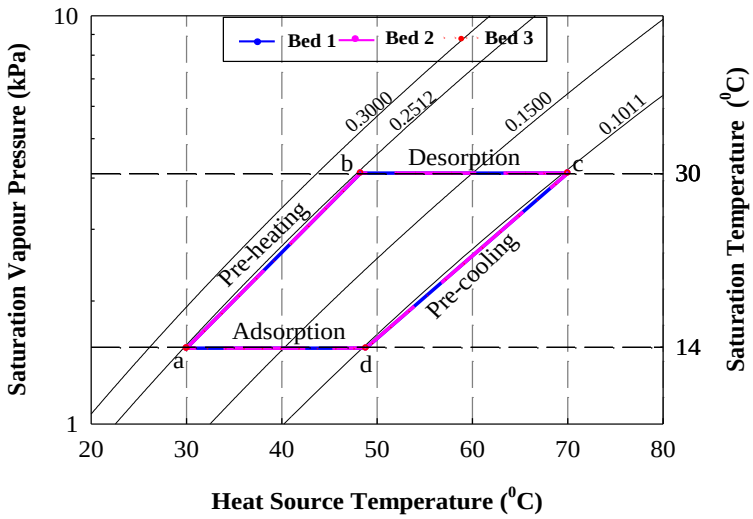

Fig. 9. Conceptual Duhring diagram of Cycle A

Point 'a' is indicating the end point of adsorption, and as a result, the adsorption quantity is the maximum, i.e., q_{max}. During adsorption process a bed is connected with evaporator and adsorbs refrigerant vapour from evaporator at evaporator pressure, P_{evp}, which is equivalent to the evaporator temperature, T_{evp}. Pre-heating mode is indicated by a-b, during this mode bed is fully disconnected from other parts and only heated by hot water to increase the pressure up to condenser pressure, i.e., P_{con} (corresponding to condenser Temperature, T_{con}). After becoming the pressure equal to the condenser pressure, Bed will be connected with condenser and then desorption mode is started. Consequently point 'b' indicating the end point of pre-heating and starting point of desorption, and the adsorption quantity will be remained maximum at this point. In desorption mode bed is heated by hot water to remove all refrigerant vapor to the condenser. As a result, at the end point of desorption (point 'c') the adsorption quantity will be minimum, i.e., q_{min}. The main function of condenser is to condense the refrigerant and then send back to the evaporator via U tube. Point 'c' is the starting point of pre-cooling mode and during this mode bed is also fully disconnected from other parts and only is cooled by passing cooling water. Main intention of pre-cooling is to reduce its pressure up to evaporator pressure. Point 'd' is the end point of pre-cooling and starting point of adsorption. The adsorption quantity will also be remained minimum (i.e., q_{min}) at this point due to

neither happened adding or removing refrigerant during pre-cooling. Thus, point 'c' and 'd' are found on the same concentration curve (Figure 3). Cooling heat or heat released from evaporator, Q_{col} and desorption heat Q_{des} were calculated using the following equations [25]:

$$Q_{col} = M_s \times (q_{\max} - q_{\min})[L_w - C_w(T_{con} - T_{evp})] \tag{3}$$

$$Q_{des} = M_s \times [(C_s + C_w \times (q_{\max} + q_{\min})/2)) \times (T_{des.end} - T_{des.begin}) + (q_{\max} - q_{\min})Q_{st}] \tag{4}$$

Heat for pre-heating, Q_{pheat} was calculated using Eq. (5) as follow.

$$Q_{pheat} = M_s \times (C_s + C_W \times q_{\max}) \times (T_{pheat.end} - T_{pheat.begin}) \tag{5}$$

where $T_{des.end}$, $T_{des.begin}$, $T_{pheat.end}$ and $T_{pheat.begin}$ are indicating the starting and end point temperatures of desorption and pre-heating mode.

The coefficient of performance (COP) is the ratio of the amount of heat released and supply heat in one cycle and specific cooling effect (SCE) is the total heat release divided by total mass of the silica gel contained in the heat exchangers. COP and SCE were calculated by using the following equations:

$$COP = \frac{Q_{col}}{Q_{des} + Q_{preheat}} \tag{6}$$

$$SCE = \frac{Q_{col}}{M_s} \tag{7}$$

Duhring diagram of Cycle B with mass recovery with heating/cooling is shown in Figure 10, while that with mass recovery without heating/cooling is shown in Figure 11. In this cycle Bed 1/ Bed 2 is following mass recovery cooling, pre-heating, desorption, mass recovery heating, pre-cooling and adsorption modes indicated by the recurring diagram a-b-c-d-e-f-g-h-a. On the other hand, Bed 3 is only following pre-heating, desorption, pre-cooling and adsorption modes, which is stated in the figure by the diagram a-d-e-h-a. The mode a-b and e-f are indicating mass recovery with cooling and heating, respectively. During mass recovery Bed 1 and Bed 2 are internally connected by opening the connecting valve to allow vapour transfer. At the same time one bed is heated and another bed is cooled by passing through hot and cooling water. As a result, bed temperature at the end of mass recovery was the same as the previous temperature indicated by the points b and f. That is why the mode is called mass recovery with heating/cooling. On the other hand, mass recovery without heating/cooling system two beds is connected internally and beds are not heated or cooled by passing hot or cooling water. Pressure difference between two beds is working as the driving force for vapor transfer. The Duhring diagram of cycle B with mass recovery without heating/cooling process is shown in Figure 11. As a result of mass recovery without heating/cooling adsorption side bed temperature was increased (point b). On other hand desorption side bed temperature was decreased (point f). During mass recovery; 1) vapor mass of adsorption side and desorption side; and 2) temperature increase and decrease associated with the adsorption heat and desorption heat were considered to calculate the saturated vapor pressure of Bed 1 and Bed 2. Mathematically it can be expressed as Eq. (8) and Eq. (9) as follow.

$$M_{s \cdot as} \times \Delta q_{as} = M_{s \cdot ds} \times \Delta q_{ds} \tag{8}$$

$$M_{s\cdot as}(C_s + C_w q_{as})\Delta T_{as} = M_{s\cdot ds}(C_s + C_w q_{ds})\Delta T_{ds} \tag{9}$$

where Δ*q* and ΔT are indicating the deviation of q value and bed temperature before and after mass recovery process of respective side, respectively. The subscript as and ds are indicating adsorption side and desorption side, respectively. It is noted that ΔT is zero for mass recovery with heating process.

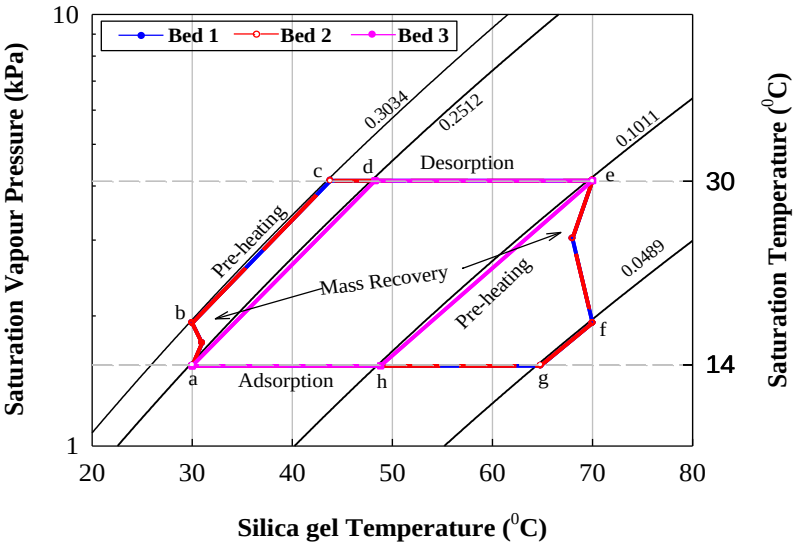

Fig. 10. Conceptual Duhring diagram of cycle B with mass recovery with heating/cooling

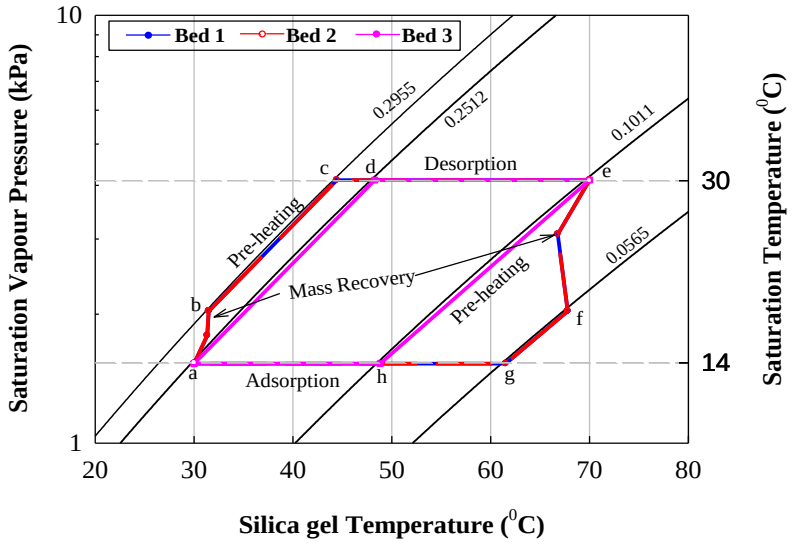

Fig. 11. Conceptual Duhring diagram of cycle B with mass recovery without heating/cooling

Figure 12 and Figure 13 illustrate the Duhring diagram of Cycle C with mass recovery with heating/cooling and without heating/cooling, respectively. The feature of this cycle is that mass recovery happened between Bed 1-Bed 3 and Bed 2-Bed 3. That is why, Bed 1/Bed 2 is following pre-heating, desorption, mass recovery heating, pre-cooling and adsorption modes (a-d-e-f-g-h-a). On the other hand, Bed 3 is following mass recovery cooling, pre-heating, desorption, pre-cooling and adsorption modes (a-b-c-d-e-h-a). The bed temperature at point b and f is same as the previous temperature due to mass recovery with heating/cooling (Figure 12). On the other hand, due to mass

recovery without heating/cooling bed temperature is increased at adsorption side and decreased at desorption side, which indicated by point b and f of Figure 13.

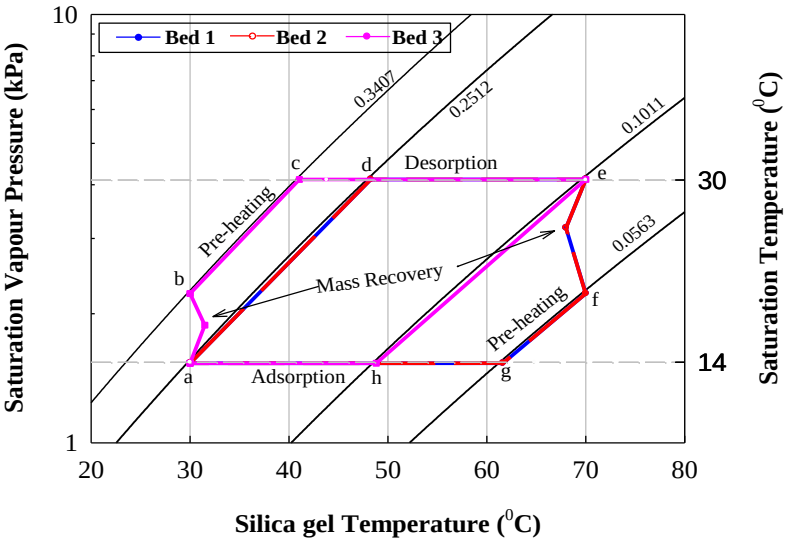

Fig. 12. Conceptual Duhring diagram of cycle C with mass recovery with heating/cooling

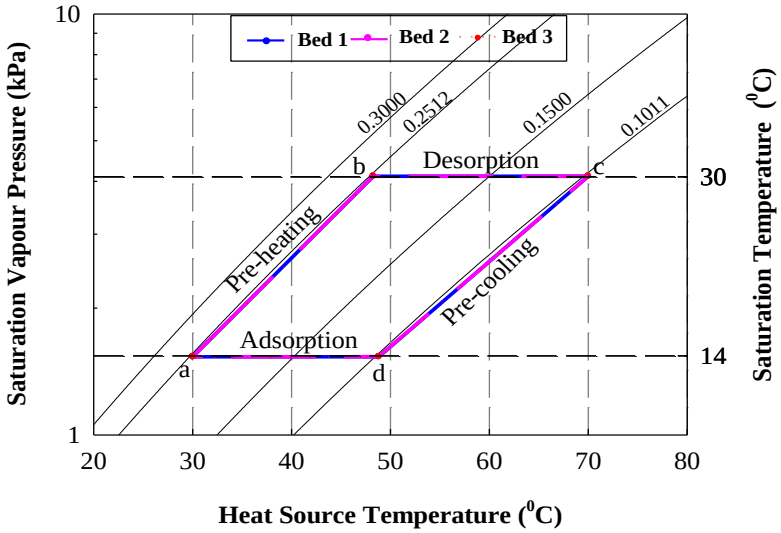

Fig. 13. Conceptual Duhring diagram of cycle C with mass recovery without heating/cooling

The Duhring diagram of cycle D is shown in Figure 14. The cyclic diagrams a-b-c-d-g-a and a-e-f-g-a are indicating the different modes of Bed 1 and Bed 2 and Bed 3, respectively. The modes a-b and a-e are designate for mass recovery cooling and pre-heating mode because both internally connected at equal pressure. Although equal pressure is existed but Bed 3 is desorbing the adsorbed refrigerant to the other beds due to it is heated by hot water.

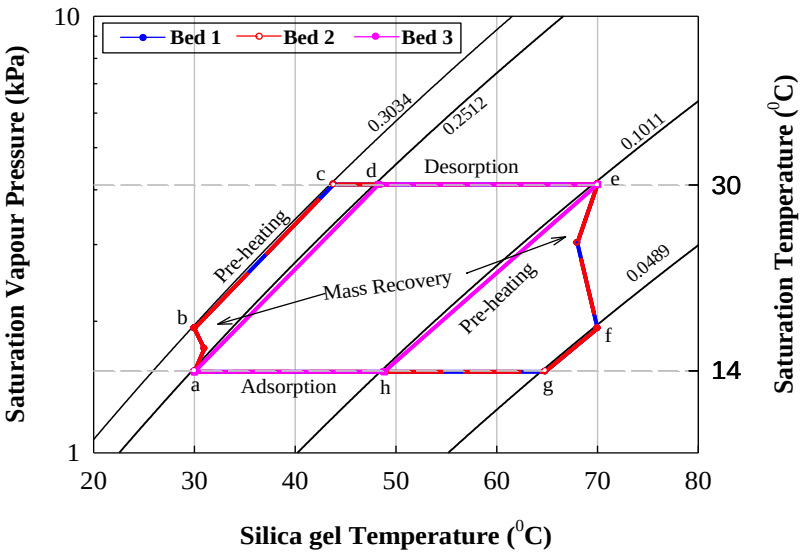

Fig. 14. Conceptual Duhring diagram of cycle D

Mass recovery mode is fully absent in cycle D as it increases the performance of the system that is why mass recovery process has been proposed between Bed 1 and Bed 2. The Duhring diagram of proposed cycle E mass recovery with heating/cooling and without heating/cooling is shown in Figure 15 and Figure 16, respectively. The modes b-c and e-f are indicating the mass recovery cooling and heating, respectively.

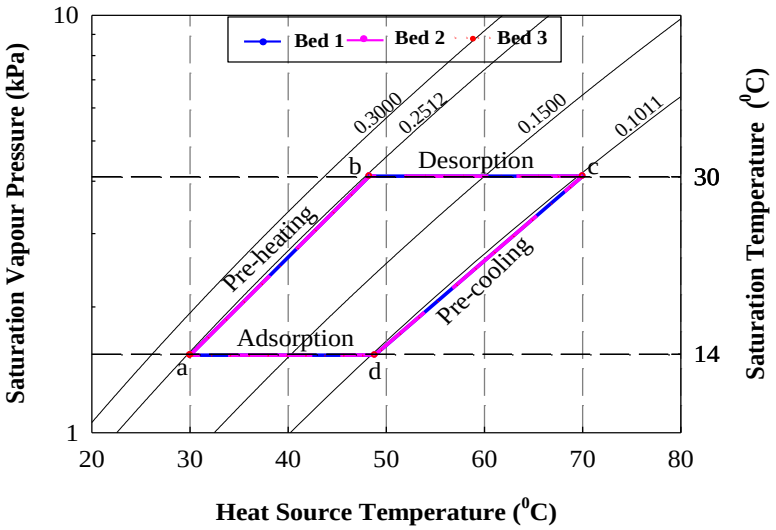

Fig. 15. Conceptual Duhring diagram of proposed cycle E with mass recovery with heating/cooling

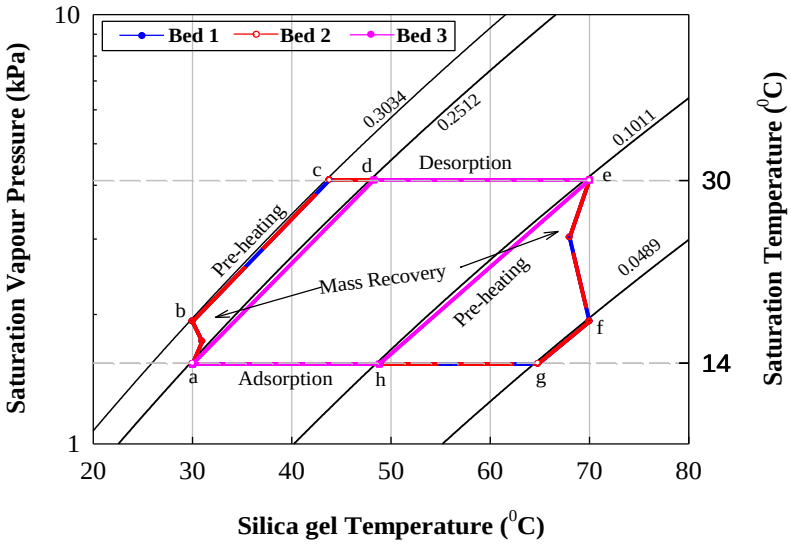

Fig. 16. Conceptual Duhring diagram of proposed cycle E with mass recovery without heating/cooling

The Duhring diagram of another proposed cycle is shown in Figure 17. This diagram is similar as the diagram of cycle D but in this case Bed 1/ Bed 2 is following mass recovery heating, pre-cooling and adsorption modes (a-e-f-g-a) and Bed 3 is following mass recovery cooling, pre-heating, desorption, pre-cooling and adsorption modes (a-b-c-d-g-a). It is noted that Bed 3 is completing two cycles within one cycle of Bed 1/Bed 2 in all chillers. It is also noted that Duhring diagram only for 70 °C heat source temperature was presented for all chillers.

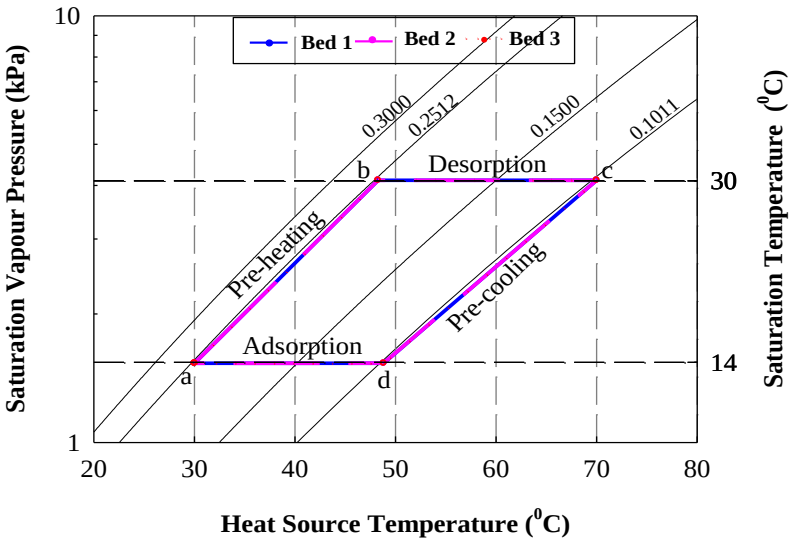

Fig. 17. Conceptual Duhring diagram of proposed cycle F

3. Results and Discussions

The coefficient of performance (COP) and specific cooling effect (SCE) of all chillers have been calculated for different heat source temperature ranging from 60 °C to 90 °C, which are shown in Figure 18 to Figure 24. From these figures it is obvious that SCE is increasing with heat source temperature but the effect of heat source temperature on COP is not unique for all system. For cycle A and D, COP is increasing up to certain heat source temperature after little bit decreased at higher temperature (Figure 18 and Figure 21). On the other hand, for cycles B and C, COP is sharply

decreasing at higher temperature and maximum COP value indicated around 65 °C temperature (Figure 19 and Figure 20). It is noticeable from these figures that mass recovery with heating/cooling is providing little bit higher SCE and lower COP in comparison with mass recovery without heating/cooling system of the three-bed adsorption.

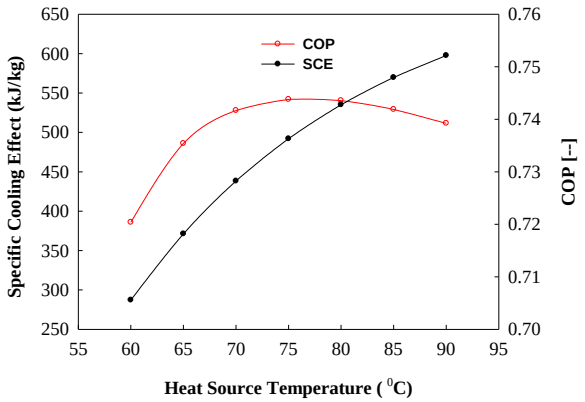

Fig. 18. Variation of COP and SCE with heat source temperature of cycle A

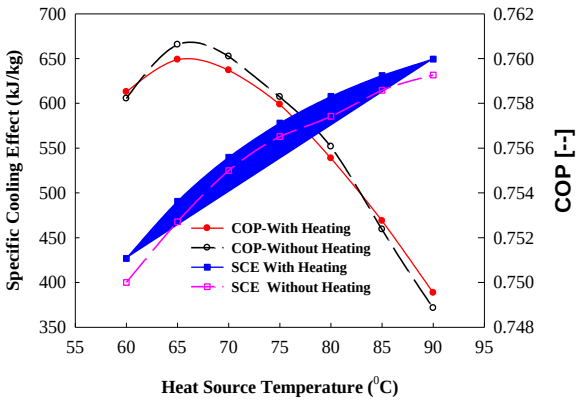

Fig. 19. Variation of COP and SCE with heat source temperature of cycle B

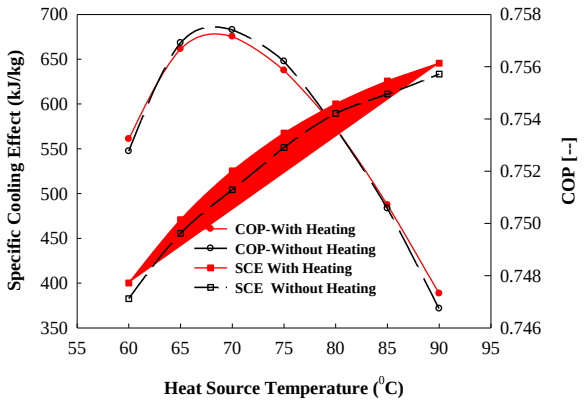

Fig. 20. Variation of COP and SCE with heat source temperature of cycle C

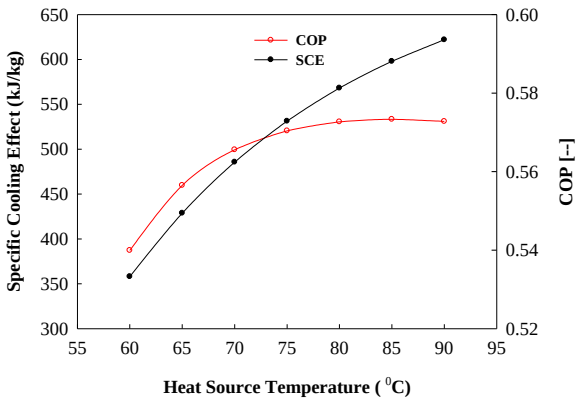

Fig. 21. Variation of COP and SCE with heat source temperature of cycle D

Figure 22 indicated that the increasing pattern of SCE for proposed cycle E with mass recovery with heating/cooling and without heating/cooling is fully comparable with previous four cycles. It is also indicated that SCE is higher for mass recovery with heating/cooling system with respect to mass recovery without heating/cooling system. Observed effect of heat source temperature on COP is also comparable with other chillers but at lower heat source temperature COP for mass recovery without heating/cooling system is lower than mass recovery with heating/cooling system, which is not comparable with other cycle. The performance of cycle D and cycle E was compared and also shown in Figure 22. Basically, both cycles are same but main difference in operation modes due to add mass recovery process between Bed 1 and Bed 2 in cycle E. It is obvious that proposed mass recovery cycle E is providing better COP and SCE compare to the without mass recovery cycle D.

The performance of proposed cycle F is shown in Figure 23. For this cycle effect of mass ratio between Bed 3 and Bed 1/Bed 2 was investigated. The mass ratio R = 2.0, i.e., the size of Bed 3 is double than Bed 1/Bed 2 is providing better performance compare to ratio 0.5 and 1.0. The increasing trend of COP and SCE both are comparable with all other chillers. Thus, the size of Bed 3 was chosen as double compare to other two beds but total mass of silica get was kept constant as other chillers.

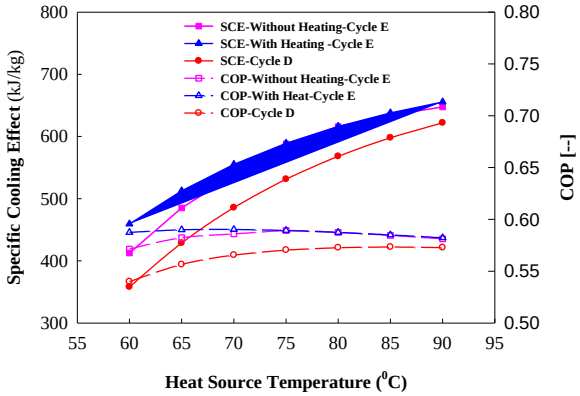

Fig. 22. Comparison of performance of cycle D and cycle E

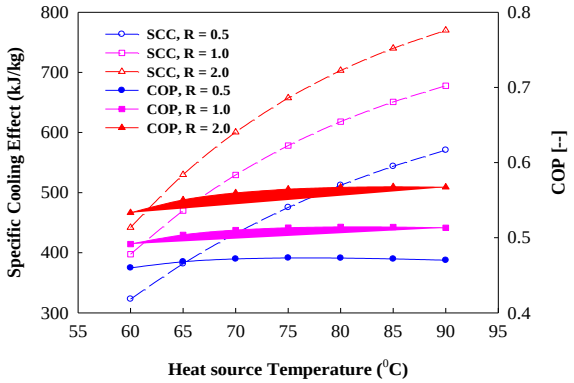

Fig. 23. Variation of COP and SCE with heat source temperature of cycle F

The overall performance of all chillers was compared, which is shown in Figure 24 to Figure 27. From Figure 24 and Figure 26, it is clear that the COP of mass recovery cycle B and cycle C are exactly similar and higher than the without mass recovery cycles A, D and F. It means that mass recovery cycle with heating/cooling or without heating/cooling is better than without mass recovery cycle. The COP of cycle B is height compare to the all-other chillers. On the other hand, from Figure 25 and Figure 27 it is obvious that SCE of proposed both Cycles E and F is higher compare to all other chillers whether it works in mass recovery with heating/cooling or without heating/cooling process. But COP is lower than the cycles A, B and C. The proposed cycle F is providing the highest SCE and lowest COP among the all chillers. The COP of a system depends on many parameters thus further investigation will be done dynamically to know the actual behavior of the proposed chillers.

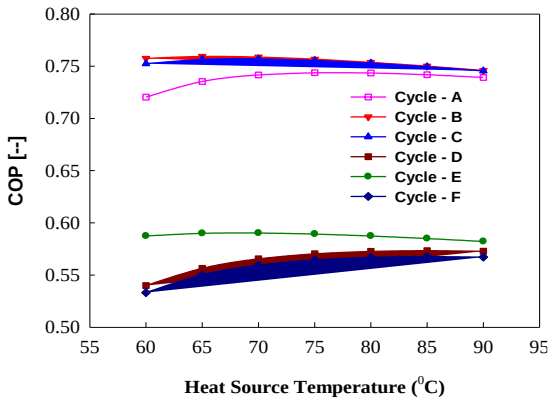

Fig. 24. Comparison of COP of three-bed mass recovery with heating/cooling adsorption chillers

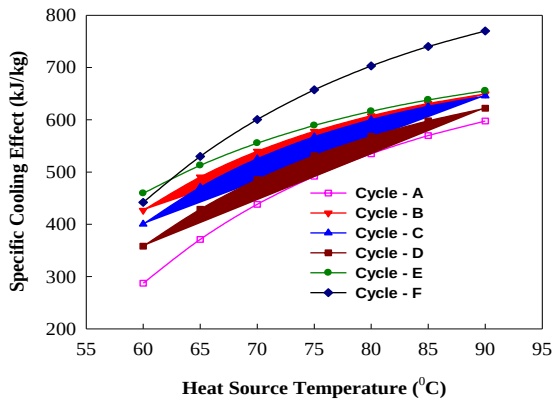

Fig. 25. Comparison of SCE of there-bed mass recovery with heating/cooling adsorption chillers

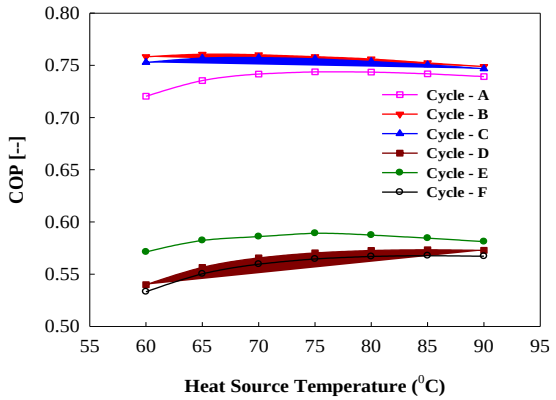

Fig. 26. Comparison of COP of there-bed mass recovery without heating/cooling adsorption chillers

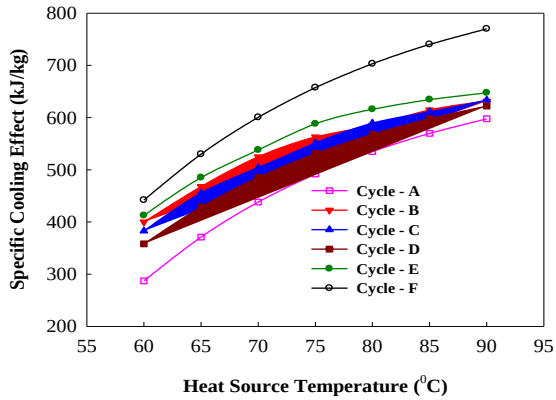

Fig. 27. Comparison of SCE of there-bed mass recovery without heating/cooling adsorption chillers

4. Conclusions

Three-bed adsorption chiller is capable of utilizing low temperature waste heat/solar heat, producing continuous cooling load to the evaporator, without fluctuation on chilled water outlet temperature and it will have better performances compared with conventional two-bed adsorption chiller. There is better scope to make three-bed adsorption chiller more popular. In this study design of two different types of adsorption chiller has been proposed and the performance were investigated statically. Observed performance was compared with four other different types of three-bed adsorption chiller under the same operating conditions.

It is obvious that mass recovery cycle is better than without mass recovery cycle. Mass recovery with heating/cooling chiller is providing better SCE and lower COP compare to mass recovery without heating/cooling cycle. The adsorption cycle B is providing the highest COP compared with all other chillers. The cycle B use the mass recovery process enhanced the COP by increasing the evaporated refrigerant mass without any heat input. The mass recovery process is performed by interconnecting two beds for depressurizing-pressurizing after the desorption-adsorption process. The mass recovery cycle was effective for improving cooling power also, especially at relatively low driving temperatures. On the other hand, proposed chillers (Cycle E and Cycle F) are providing the higher SCE compared with other chillers. More study will be needed to increase the COP of proposed chillers as it is shown inferior COP.

In term of potential applications in building cooling, this system is very suitable as an alternative cooling system besides the conventional system one. In Building usually available abundant of heat recovery from heating system. Further development can also be developed from solar energy heaters for the tropical countries.

Acknowledgement
The author expresses gratitude thanks to the Directorate Academic and Vocational Higher Education (DAPTV), Directorate General of Vocational Education, Ministry of Education, Culture Research and Technology-Indonesian Government. Thank is also forwarded to all members and research assistants in the Mechanical Engineering Department of Bali State Polytechnic for the excellent support.

References

[1] Samsudin, Muhammad Syazwan Nizam, Md Mizanur Rahman, and Muhamad Azhari Wahid. "Sustainable power generation pathways in Malaysia: Development of long-range scenarios." *Journal of Advanced Research in Applied Mechanics* 24, no. 1 (2016): 22-38.

[2] Alawi, Omer A., and Haslinda Mohamed Kamar. "Performance of Solar Thermal Collector Using Multi-Walled Carbon Nanotubes: Simulation Study." *Journal of Advanced Research in Micro and Nano Engineering* 2, no. 1 (2020): 12-21.

[3] Chen, W. D., Hany M. Hasanien, and K. J. Chua. "Towards a digital twin approach-Experimental analysis and energy optimization of a multi-bed adsorption system." *Energy Conversion and Management* 271 (2022): 116346. https://doi.org/10.1016/j.enconman.2022.116346

[4] Muttakin, Mahbubul, Md Amirul Islam, Kuldeep Singh Malik, Deepak Pahwa, and Bidyut Baran Saha. "Study on optimized adsorption chiller employing various heat and mass recovery schemes." *International Journal of Refrigeration* 126 (2021): 222-237. https://doi.org/10.1016/j.ijrefrig.2020.12.032

[5] Hussin, Norasikin, Siti Shareeda Mohd Nasir, Nor Azirah Mohd Fohimi, Rohidatun Mahmod, Yusli Yaakob, and Dzullijah Ibrahim. "Analysis of Thermal Comfort and Energy Consumption for Educational Building." *Journal of Advanced Research in Experimental Fluid Mechanics and Heat Transfer* 10, no. 1 (2022): 1-9.

[6] Xia, Z. Z., R. Z. Wang, D. C. Wang, Y. L. Liu, J. Y. Wu, and C. J. Chen. "Development and comparison of two-bed silica gel-water adsorption chillers driven by low-grade heat source." *International Journal of Thermal Sciences* 48, no. 5 (2009): 1017-1025. https://doi.org/10.1016/j.ijthermalsci.2008.07.004

[7] Pan, Q. W., L. Liu, B. Wang, J. Xu, and T. S. Ge. "Design and experimental study on a small-scale silica gel/water adsorption chiller with heat and mass recovery scheme for solar energy use." *Solar Energy* 252 (2023): 91-100. https://doi.org/10.1016/j.solener.2023.01.052

[8] Xu, Jing, Qaunwen Pan, Wei Zhang, Zhiliang Liu, Ruzhu Wang, and Tianshu Ge. "Design and experimental study on a hybrid adsorption refrigeration system using desiccant coated heat exchangers for efficient energy utilization." *Renewable and Sustainable Energy Reviews* 169 (2022): 112890. https://doi.org/10.1016/j.rser.2022.112890

[9] Younes, Mai Bani, Nabeel Abu Shaban, and Yousef Altork. "Modelling and performance assessment of a Tri-Generation cooling system using two adsorption chillers under Jordanian climate." *Case Studies in Thermal Engineering* 44 (2023): 102848. https://doi.org/10.1016/j.csite.2023.102848

[10] Krzywanski, J., D. Skrobek, A. Zylka, K. Grabowska, A. Kulakowska, M. Sosnowski, W. Nowak, and Ana María Blanco-Marigorta. "Heat and mass transfer prediction in fluidized beds of cooling and desalination systems by AI approach." *Applied Thermal Engineering* 225 (2023): 120200. https://doi.org/10.1016/j.applthermaleng.2023.120200

[11] Krzywanski, Jaroslaw, Karolina Grabowska, Marcin Sosnowski, Anna Żyłka, Karol Sztekler, Wojciech Kalawa, Tadeusz Wójcik, and Wojciech Nowak. "Modeling of a re-heat two-stage adsorption chiller by AI approach." In *MATEC Web of Conferences*, vol. 240, p. 05014. EDP Sciences, 2018. https://doi.org/10.1051/matecconf/201824005014

[12] Krzywanski, Jarosław, Karol Sztekler, Marcin Bugaj, Wojciech Kalawa, Karolina Grabowska, Patryk Robert Chaja, Marcin Sosnowski, Wojciech Nowak, Łukasz Mika, and Sebastian Bykuć. "Adsorption chiller in a combined heating and cooling system: Simulation and optimization by neural networks." *Bulletin of the Polish Academy of Sciences. Technical Sciences* 69, no. 3 (2021).

[13] Aneli, Stefano, Antonio Gagliano, Giuseppe Marco Tina, Gamze Gediz Ilis, and Hasan Demir. "Effectiveness and constraints of using PV/Thermal collectors for heat-driven chillers." *Applied Thermal Engineering* 210 (2022): 118330. https://doi.org/10.1016/j.applthermaleng.2022.118330

[14] Revichandran, Rajeanderan, Jaffar Syed Mohamed Ali, Moumen Idres, and A. K. M. Mohiuddin. "Energy Efficiency and Optimization of Buildings for Sustainable Development in Malaysia." *Journal of Advanced Research in Fluid Mechanics and Thermal Sciences* 93, no. 2 (2022): 28-36. https://doi.org/10.37934/arfmts.93.2.2836

[15] Lu, Z. S., and R. Z. Wang. "Performance improvement by mass-heat recovery of an innovative adsorption air-conditioner driven by 50-80 C hot water." *Applied Thermal Engineering* 55, no. 1-2 (2013): 113-120. https://doi.org/10.1016/j.applthermaleng.2013.03.001

[16] Kumar, Jayadeep, and James Varghese. "Area Optimization of a Flat Plate Collector for Meeting the Air Conditioning Load of an Office Building Using a Solar Vapor Absorption System." *Journal of Advanced Research in Fluid Mechanics and Thermal Sciences* 92, no. 1 (2022): 134-148. https://doi.org/10.37934/arfmts.92.1.134148

[17] El-Ghetany, H. H., M. A. Omara, R. G. Abdelhady, and Gamal B. Abdelaziz. "Design of silica gel/water adsorption chiller powered by solar energy for air conditioning applications." *Journal of Energy Storage* 63 (2023): 107055. https://doi.org/10.1016/j.est.2023.107055

[18] Alahmer, Ali, Salman Ajib, and Xiaolin Wang. "Comprehensive strategies for performance improvement of adsorption air conditioning systems: A review." *Renewable and Sustainable Energy Reviews* 99 (2019): 138-158. https://doi.org/10.1016/j.rser.2018.10.004

[19] Saha, B. B., S. Koyama, JB E. al Lee, K. Kuwahara, K. C. A. Alam, Y. Hamamoto, A. Akisawa, and T. Kashiwagi. "Performance evaluation of a low-temperature waste heat driven multi-bed adsorption chiller." *International Journal of Multiphase Flow* 29, no. 8 (2003): 1249-1263. https://doi.org/10.1016/S0301-9322(03)00103-4

[20] Khan, M. Z. I., B. B. Saha, K. C. A. Alam, A. Akisawa, and T. Kashiwagi. "Study on solar/waste heat driven multi-bed adsorption chiller with mass recovery." *Renewable Energy* 32, no. 3 (2007): 365-381. https://doi.org/10.1016/j.renene.2006.02.003

[21] Khan, Md Zafar Iqbal, Bidyut Baran Saha, K. C. Alam, Takahiko Miyazaki, Atsushi Akisawa, and Takao Kashiwagi. "Multi-bed mass recovery adsorption cycle-improving performance." *Transactions of the Japan Society of Refrigerating and Air Conditioning Engineers* 23, no. 4 (2012): 399-408.

[22] Uyun, A. S., A. Akisawa, Takahiko Miyazaki, Y. Ueda, and T. Kashiwagi. "Numerical analysis of an advanced three-bed mass recovery adsorption refrigeration cycle." *Applied Thermal Engineering* 29, no. 14-15 (2009): 2876-2884. https://doi.org/10.1016/j.applthermaleng.2009.02.008

[23] Uyun, Aep Saepul, Takahiko Miyazaki, Yuki Ueda, and Atsushi Akisawa. "Experimental investigation of a three-bed adsorption refrigeration chiller employing an advanced mass recovery cycle." *Energies* 2, no. 3 (2009): 531-544. https://doi.org/10.3390/en20300531

[24] Akahira, Akira. "Research on the advanced adsorption refrigeration cycles with vapour recovery." *PhD Thesis, Tokyo University of Agriculture and Technology* (2004).

[25] Miyazaki, Takahiko, Yuki Ueda, and Atsushi Akisawa. "Static Analysis of Double Effect Adsorption Refrigeration Cycle Using Silica gel/Water Pair." *Transactions of the Japan Society of Refrigerating and Air Conditioning Engineers* 27, no. 1 (2011): 57-65.